VA.6.65/..

- **for heavy loads**
- **suitable for all types of covering**
- **visible surface in stainless steel**
- **narrow visible surface**

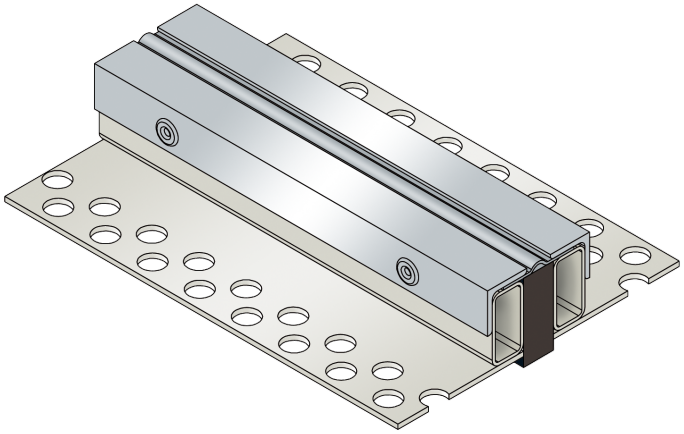

FEATURES
resistant to heavy loads, trafficable by fork-lift trucks, perforated bearing legs guarantee the best connection to the substrate/covering

APPLICATIONS
all industrial applications, exhibition halls

MATERIAL
substructure hot-dip galvanised steel and visible surface stainless steel V2A, K/VA foam material in the central section

COVERING TYPES
asphalt, coating, concrete, screed, industrial coverings, natural and stone slabs

TRAFFICABILITY
industrial trucks (lifting trucks, fork-lifts etc.), passenger cars, trucks

FORMED PARTS
corner piece, T-piece, cross piece

NOTES
Depending on the floor covering, we recommend installing a grouting seal between the joint profile and the covering to prevent the hairline crack caused by the building physics.

TECHNICAL DATA

Movement horizontal:	10 mm (±5 mm)
Movement vertical:	2 mm (±1 mm)
Visible width:	65 mm
Maximal joint width:	30 mm
Load rating:	wheel load 5000 kg up to Ø 150 mm, B = 100 mm
Load rating trucks:	600 kN (DIN 1072)
Load rating forklifts:	150 kN (DIN 1055-3)
Supply length:	3 mtr

DESIGNS

ARTICLE NO.	PROFILE HEIGHT (h)	RECESS (BxT)
VA.6.65/30	28 mm	230 x 38 mm
VA.6.65/40	38 mm	230 x 48 mm
VA.6.65/50	48 mm	230 x 58 mm
VA.6.65/70	68 mm	230 x 78 mm
VA.6.65/90	88 mm	230 x 98 mm
VA.6.65/110	108 mm	230 x 118 mm

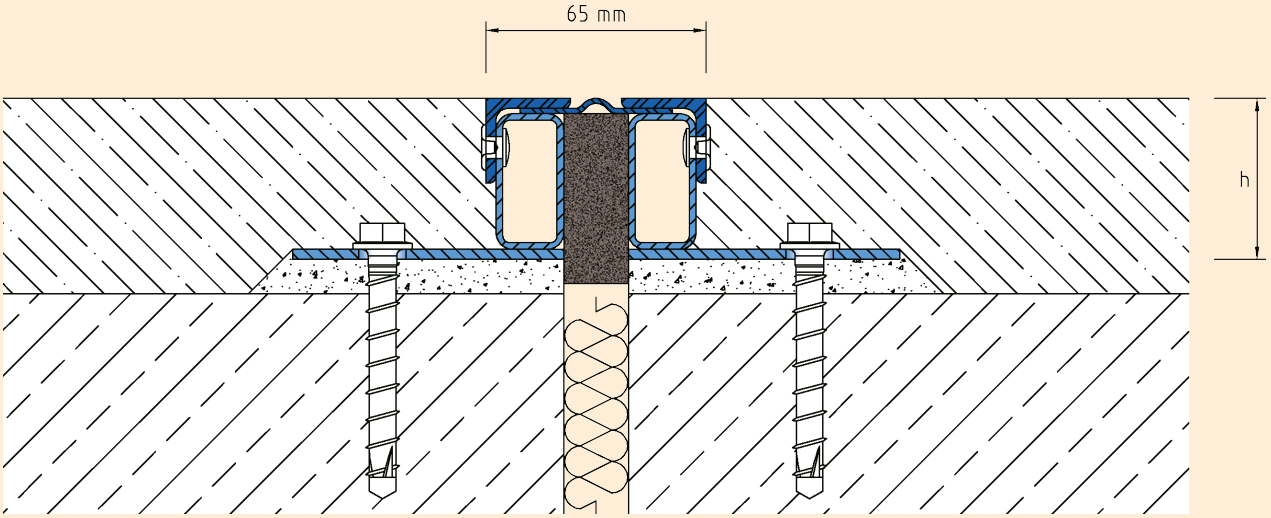

VA.6.65

Subject to technical change without notice.